THIS DRAWING IS UNPUBLISHED. RELEASED FOR PUBLICATION
© COPYRIGHT – BY TYCO ELECTRONICS CORPORATION. ALL RIGHTS RESERVED.

LOC	DIST
J	—

REVISIONS 変更

P	LTR	DESCRIPTION	DATE	DWN	APVD
	G	REVISED PER ECR-10-007167	09APR10	HMR	TM
	H	REVISED	30APR2010	H.U	T.M

(2 極)
(2 Pos)

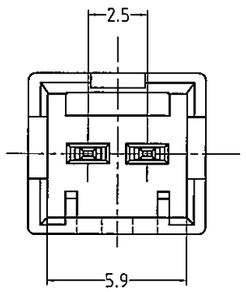

(6 極)
(6 Pos)

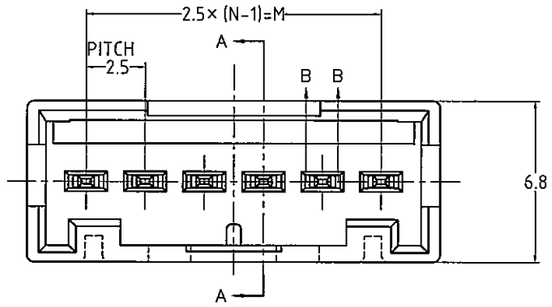

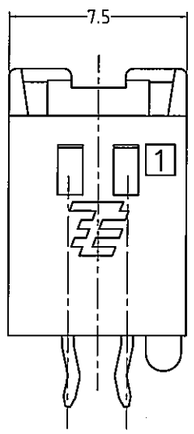

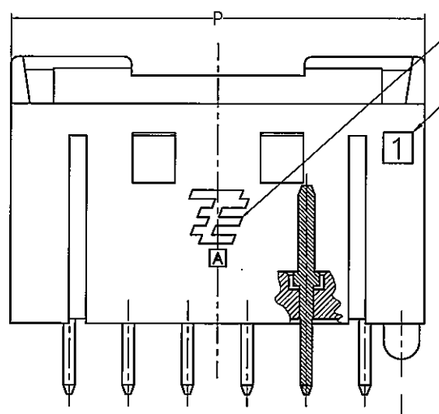

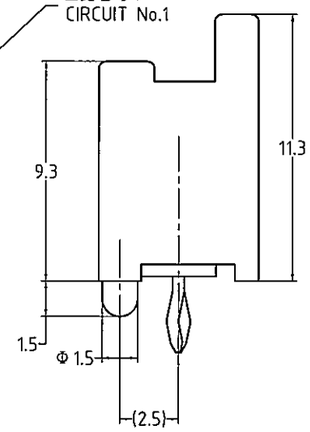

断面 B-B
SECT B-B
(1.55)

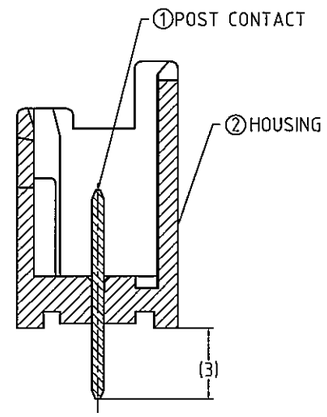

断面 A-A
SECT A-A

No. 項番	NAME 名称	MATERIAL 材料
①	POST CONTACT ポストコンタクト	BRASS, FINISH : Tin , OVER Ni 黄銅 下地：Niめっき、仕上：錫めっき
②	HDR HOUSING ヘッダーハウジング	66NYLON GF UL94V-0 66ナイロン・ガラス強化 UL94V-0

注；
1. 一般公差：±0.3、±3°
2. 材料：66ナイロン ガラス強化(UL94V-0)
3. かん合相手製品型番：表参照のこと。
4. 適用基板穴径：Φ A
パンチ加工穴：$0.7^{+0.1}_{-0}$
ドリル加工穴：0.9±0.05

NOTE
1. GENERAL TOLERANCE : ±0.3, ±3°
2. MATERIAL : 66NYLON GF (UL94V-0)
3. MATING CONN. P/N : SEE TABLE
4. APPLICABLE P.C.B. HOLE DIA : Φ A
PUNCHED HOLE : $0.7^{+0.1}_{-0}$
DRILLED HOLE : 0.9±0.05

基板取付穴寸法 2P～6P
非累積公差

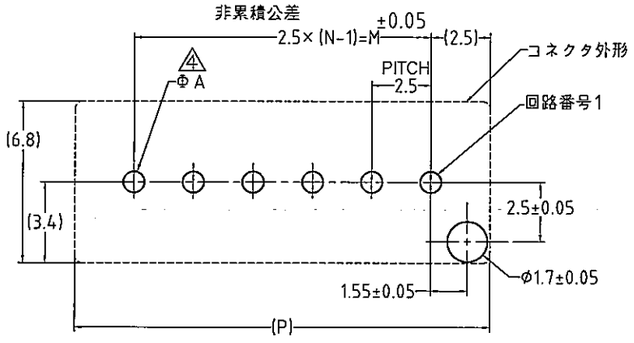

型番はシート２枚目,3 枚目参照
FOR PART NO. SEE SHEET 2 OF 3 , 3 OF 3

THIS DRAWING IS A CONTROLLED DOCUMENT.

DIMENSIONS: 単位：耗 mm

TOLERANCES UNLESS OTHERWISE SPECIFIED: 一般公差
0 PLC ±–
1 PLC ±–
2 PLC ±–
3 PLC ±–
4 PLC ±–
ANGLES ±–

MATERIAL 材料: SEE NOTE
FINISH 仕上: –

DWN LILY LIU 29JAN08
CHK A.OISHI 29JAN08
APVD S.MANABE 29JAN08
PRODUCT SPEC 製品規格 108-78307
APPLICATION SPEC 取付適用規格 114-5359
WEIGHT –

CUSTOMER DRAWING

Tyco Electronics
Tyco Electronics AMP K.K.
Shanghai,CHINA

NAME 名称: GRACE INERTIA CONNECTOR 2.5 HDR ASSY TIN VERSION

SIZE	CAGE CODE	DRAWING NO 番号	RESTRICTED TO
A3	00779	C-1871843	–

SCALE 尺度 4:1 | SHEET 1 OF 3 | REV H

THIS DRAWING IS UNPUBLISHED. RELEASED FOR PUBLICATION
© COPYRIGHT – BY TYCO ELECTRONICS CORPORATION. ALL RIGHTS RESERVED.

LOC	DIST
J	—

REVISIONS 変更

P	LTR	DESCRIPTION	DATE	DWN	APVD
	—	SEE SHEET 1	–	—	—

嵌合相手型番 MATING CONN P/N	8	7	6	5	4	3	2	1	備考 REMARKS	ハウジング極数 HSG Pos.			M	N	P	ボス BOSS	色 COLOR	極数 POS	ピッチ PITCH	型番 P/N
	回路 No. CIRCUIT NO.																			
X-1747066-8	*	*	*	*	*	*	*	*		8			17.5	8	22.5	WITH	YELLOW	8	2.5	3-1871843-8
	*	*	*	*	*	*	*	*		8			17.5	8	22.5	WITH	BLUE	8	2.5	2-1871843-8
	*	*	*	*	*	*	*	*		8			17.5	8	22.5	WITH	RED	8	2.5	1-1871843-8
	*	*	*	*	*	*	*	*		8			17.5	8	22.5	WITH	NATURAL	8	2.5	1871843-8
X-1747066-6			*	*	*	*	*	*		6			12.5	6	17.5		BLUE	6		2-1871843-6
			*	*	*	*	*	*		6			12.5	6	17.5		RED	6		1-1871843-6
			*	*	*	*	*	*		6			12.5	6	17.5		NATURAL	6		1871843-6
X-1747066-5				*	*	*	*	*		5			10	5	15.0		YELLOW	5		3-1871843-5
				*	*	*	*	*		5			10	5	15.0		BLUE	5		2-1871843-5
				*	*	*	*	*		5			10	5	15.0		RED	5		1-1871843-5
				*	*	*	*	*		5			10	5	15.0		NATURAL	5		1871843-5
X-1747066-4					*	*	*	*		4			7.5	4	12.5		NATURAL	4		1871843-4
X-1747066-3						*	*	*		3			5	3	10.0		YELLOW	3		3-1871843-3
						*	*	*		3			5	3	10.0		BLUE	3		2-1871843-3
						*	*	*		3			5	3	10.0		RED	3		1-1871843-3
						*	*	*		3			5	3	10.0		NATURAL	3		1871843-3
X-1747066-2							*	*		2			2.5	2	7.5		BLACK	2		4-1871843-2
							*	*		2			2.5	2	7.5		YELLOW	2		3-1871843-2
							*	*		2			2.5	2	7.5		BLUE	2		2-1871843-2
							*	*		2			2.5	2	7.5		RED	2		1-1871843-2
							*	*		2			2.5	2	7.5	WITH	NATURAL	2	2.5	1871843-2

ポストコンタクト位置
*：ポストコンタクト，
－：ピン抜き

POST CONTACT POSITION
*：POST CONTACT,
－：VACANCY

THIS DRAWING IS A CONTROLLED DOCUMENT.

DIMENSIONS: 単位：粍 mm

TOLERANCES UNLESS OTHERWISE SPECIFIED: 一般公差

0 PLC	± –
1 PLC	± –
2 PLC	± –
3 PLC	± –
4 PLC	± –
ANGLES	± –

MATERIAL 材料: SEE NOTE

FINISH 仕上: –

DWN	LILY LIU	29JAN08
CHK	A.OISHI	29JAN08
APVD	S.MANABE	29JAN08
PRODUCT SPEC 製品規格	108-78307	
APPLICATION SPEC 取付適用規格	114-5359	
WEIGHT	–	

Tyco Electronics

Tyco Electronics AMP K.K.
Shanghai,CHINA

NAME 名称: GRACE INERTIA CONNECTOR 2.5 HDR ASSY TIN VERSION

SIZE	CAGE CODE	DRAWING NO 番号	RESTRICTED TO
A3	00779	C-1871843	—

CUSTOMER DRAWING | SCALE 尺度 4:1 | SHEET 2 OF 3 | REV H

THIS DRAWING IS UNPUBLISHED. RELEASED FOR PUBLICATION - - -
© COPYRIGHT - BY TYCO ELECTRONICS CORPORATION. ALL RIGHTS RESERVED.

LOC	DIST
J	—

REVISIONS 変更

P	LTR	DESCRIPTION	DATE	DWN	APVD
	—	SEE SHEET 1	—	—	—

嵌合相手型番 MATING CONN P/N	8	7	6	5	4	3	2	1	備考 REMARKS	ハウジング極数 HSG Pos.			M	N	P	ボス BOSS	色 COLOR	極数 POS	ピッチ PITCH	型番 P/N
X-1747066-6			*	*	-	*	-	*		6			12.5	6	17.5	WITH	NATURAL	4	2.5/5.0	2069625-1
X-1747066-4					*	-	-	*		4			7.5	4	12.5	WITH	NATURAL	4	2.5	2134303-1
X-1747066-3						*	-	*		3			5	3	10.0	WITH	NATURAL	2	5.0	2013523-1

回路 No. CIRCUIT NO.

ポストコンタクト位置
*：ポストコンタクト，
－：ピン抜き

POST CONTACT POSITION
* : POST CONTACT,
– : VACANCY

THIS DRAWING IS A CONTROLLED DOCUMENT.

DIMENSIONS: 単位：耗 mm

TOLERANCES UNLESS OTHERWISE SPECIFIED: 一般公差

0 PLC	± –
1 PLC	± –
2 PLC	± –
3 PLC	± –
4 PLC	± –
ANGLES	± –

MATERIAL 材料: SEE NOTE

FINISH 仕上: –

DWN	LILY LIU	29JAN08
CHK	A.OISHI	29JAN08
APVD	S.MANABE	29JAN08
PRODUCT SPEC 製品規格	108-78307	
APPLICATION SPEC 取付適用規格	114-5359	
WEIGHT	–	

Tyco Electronics

Tyco Electronics AMP K.K.
Shanghai,CHINA

NAME 名称: GRACE INERTIA CONNECTOR 2.5 HDR ASSY TIN VERSION

SIZE	CAGE CODE	DRAWING NO 番号	RESTRICTED TO
A3	00779	C-1871843	–

CUSTOMER DRAWING

SCALE 尺度	SHEET	REV
4:1	3 OF 3	H