For more information, please visit the product page.

REV.	DESCRIPTION	DATE
A	NEW DRAWING	12/15/2005
B	Added dimensions	4/5/2006
C	housing material change	2/9/2011
D	shield dimensions changed, pcb layout updated, plastic and terminal material corrected	5/14/2013

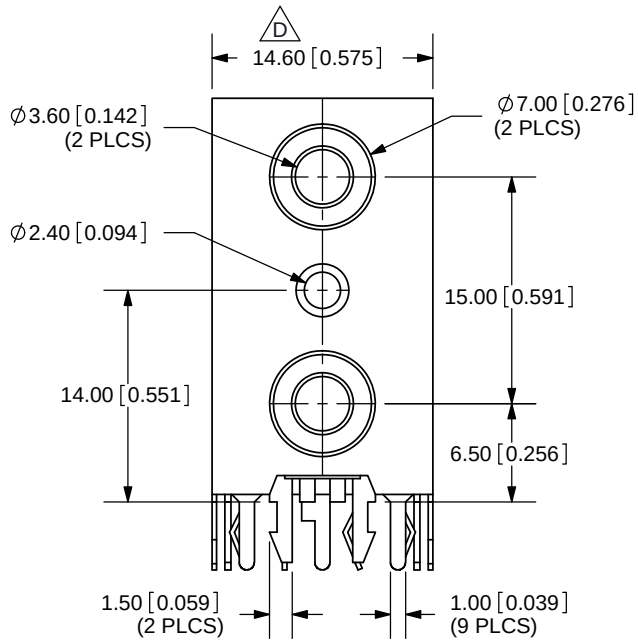

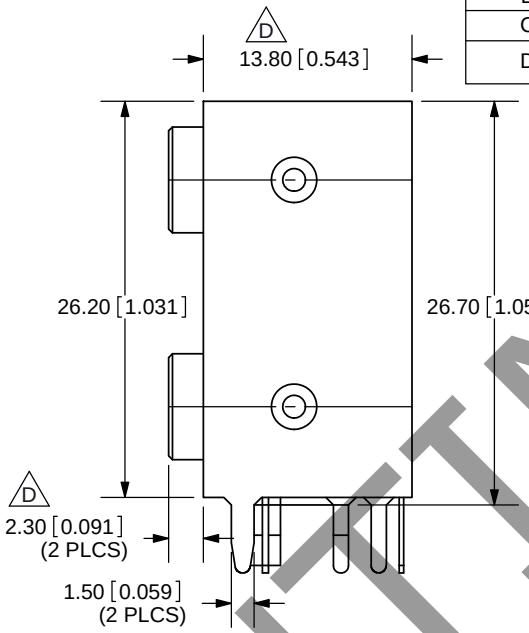

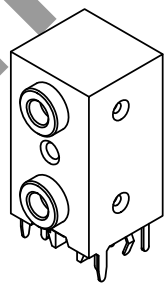

Scale: 1:1

MODEL NO.	SJD-3512-45
SCHEMATIC	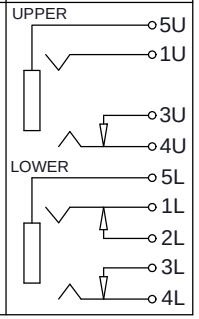

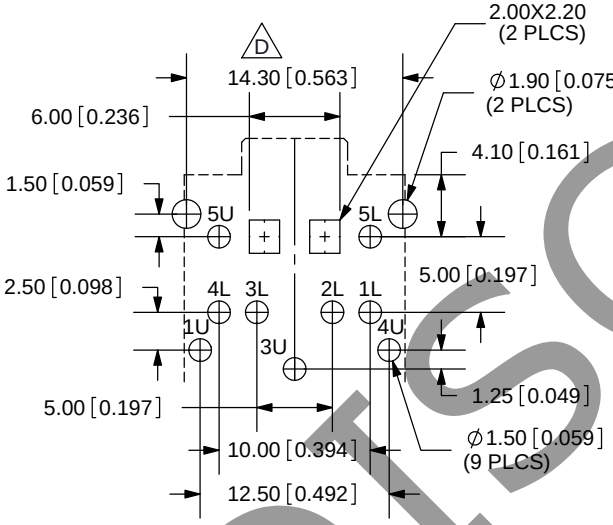

PCB LAYOUT
TOP VIEW

SPECIFICATIONS:
RATING: 16V DC @ 0.3A
CONTACT RESISTANCE: 50m OHMS MAX
INSULATION RESISTANCE: 100M OHMS MIN: 500V DC
VOLTAGE WITHSTAND: 500V AC R.M.S. FOR 1 MINUTE
LIFE: 5,000 CYCLES
OPERATING TEMPERATURE: -25~85°C

TOLERANCE:
X.X ±0.3mm
X.XX ±0.2mm

RoHS

	MATERIAL D	PLATING
TERMINAL 1U	Copper Alloy	Tin
TERMINAL 3U	Copper Alloy	Tin
TERMINAL 4U	Copper Alloy	Tin
TERMINAL 5U	Copper Alloy	Tin
TERMINAL 1L	Copper Alloy	Tin
TERMINAL 2L	Copper Alloy	Tin
TERMINAL 3L	Copper Alloy	Tin
TERMINAL 4L	Copper Alloy	Tin
TERMINAL 5L	Copper Alloy	Tin
FRONT SHIELD	SPCC	Nickel
BACK SHIELD	SPCC	Nickel
COVER	PBT	
HOUSING	PA-46	

CUI INC
20050 SW 112th Ave.
Tualatin, OR 97062
Phone: 503-612-2300
800-275-4899
Fax: 503-612-2383
Website: www.cui.com

TITLE: DUAL STACK 3.5mm STEREO JACK w/ SHLD
REV: D
PART NO. SJD-3512-45
UNITS: MM [INCHES]
DRAWN BY: RDS
APPROVED BY:
SCALE: 2:1
PC FILE NAME: SJD-3512-45

COPYRIGHT 2013 BY CUI INC.

DISCONTINUED