EFA02 03 XXX
FC Adapter Dust Cap

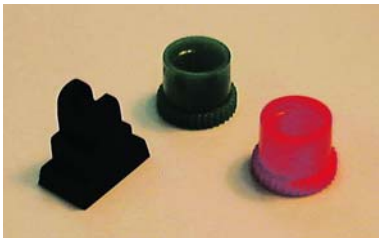

Features
- Provides environmental protection to connectors and adapters

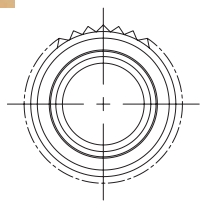

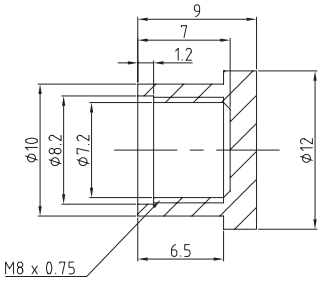

A Europlus/Richco Product	
Material: High Density Polyethylene, RMS-183	
Standard Pack: 500 per bag	
Part Number	**Color**
EFA02 03 001	Natural
EFA02 03 002	Black
EFA02 03 003	Green
EFA02 03 004	White
EFA02 03 005	Red
All dimensions in millimeters	

EFA02 06 XXX
FC Connector Dust Cap

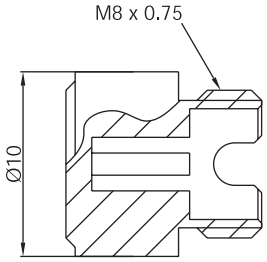

A Europlus/Richco Product	
Material: High Density Polyethylene, RMS-183	
Standard Pack: 500 per bag	
Part Number	**Color**
EFA02 06 001	Black
EFA02 06 002	Blue
All dimensions in millimeters	

EFA02 18 XXX
FC Adapter Dust Cap

Features
- Provides environmental protection to adapters
- Molded-in "mushroom" head is perfect for attaching retaining tie

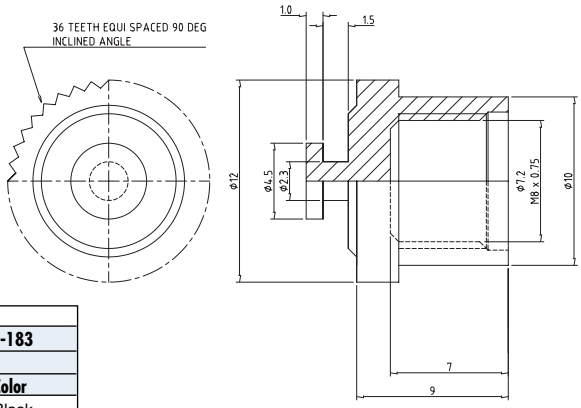

A Europlus/Richco Product	
Material: High Density Polyethylene, RMS-183	
Standard Pack: 250 per bag	
Part Number	**Color**
EFA02 18 001	Black
EFA02 18 002	Red
EFA02 18 018	Green
All dimensions in millimeters	

EFA02 19 001
ST Adapter Dust Cap

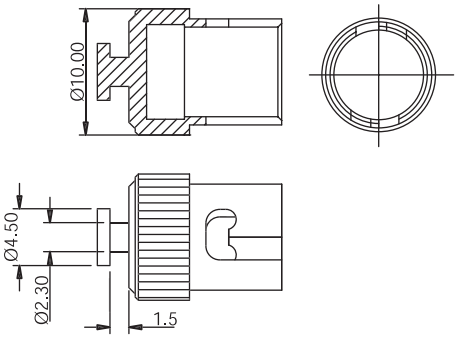

A Europlus/Richco Product
Material: High Density Polyethylene, RMS-183
Standard Pack: 250 per bag
EFA02 19 001
Parts are available by special order only. 500 pieces minimum.
All dimensions in millimeters

J